Customer name:

Type2-Type2 32A/250V AC 5m

版本号 Ver	更改通知单号 ECN	更改标记 MARK	描 述 DESCRIPTION	日期 DATE	签字 APP	校对 CHK

Type II
2-IIe

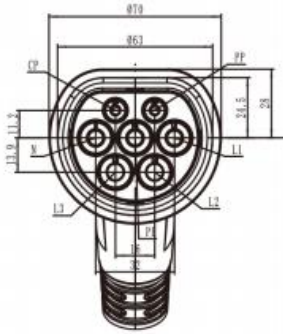

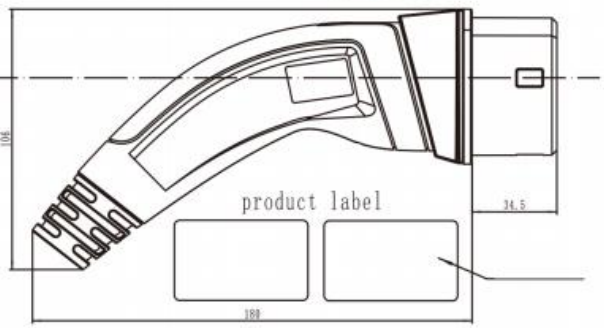

Technical parameters

Current and Voltage : 32A 250V AC

Signal current : 2A 30V

Protection Degree : IP55

Cable specification

Function	32A 250V AC	Function
L1 (1)	6 mm^2 Brown	L1 (1)
L2 (2)		L2 (2)
L3 (3)		L3 (3)
N (4)	6 mm^2 Blue	N (4)
PE (5)	6 mm^2 Yellow-green	PE (5)
CP (6)	0.5 mm^2 White	CP (6)
PP (7)		PP (7)

Type II
2-IIb

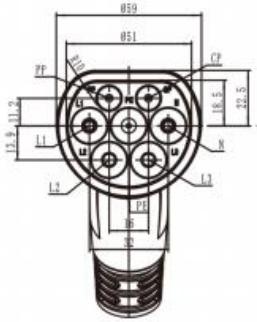

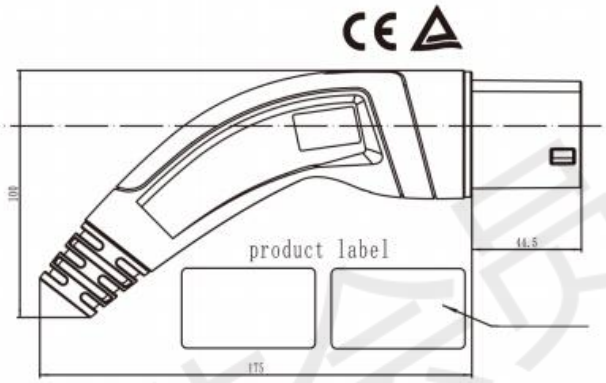

32A 1P+N+PE+PP+CP

Type II ,was designed according to the standard of

IEC 62196-2 2016 sheet 2-IIb/2-IIe

The static resistance is 220 ohm

Charging cable 5000mm 3*6mm^2+2*0.5mm^2 Black TUV overall cable

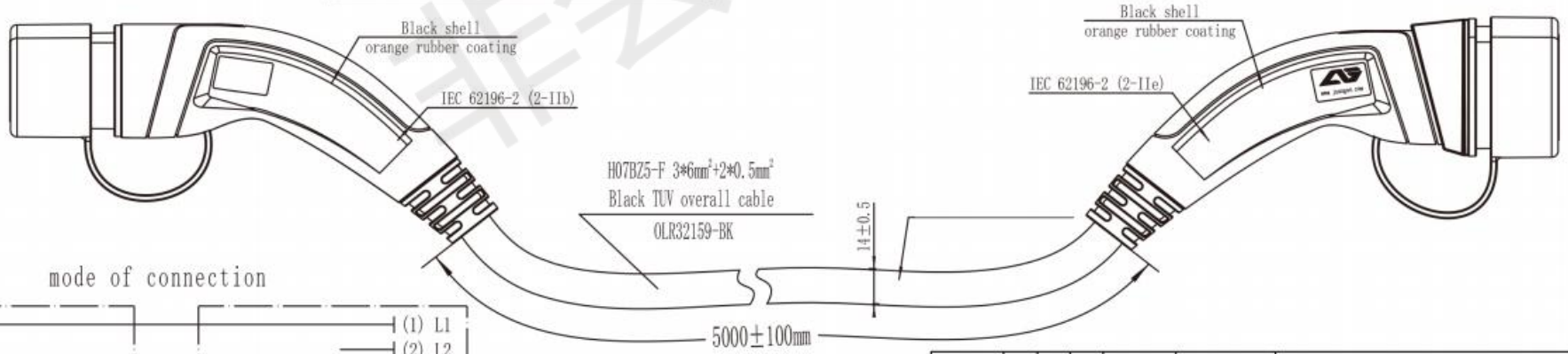

mode of connection

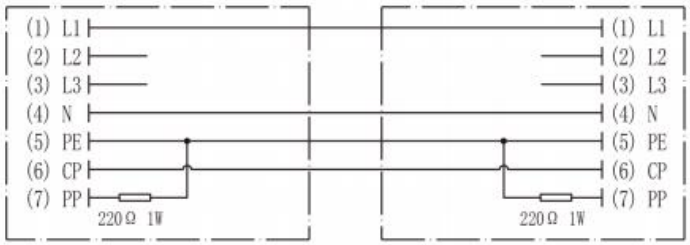

DWG. SYM	S A		PROJ. SYM		Yangzhou Teison New Energy Co.,Ltd.			
MATL	Specifications			WEIGHT		NAME	Charging connectors	
DESIGNED	DATE	CHECK	DATE	STDCHECKED	DATE	DRAW NO.	AG-IEC2-IIb/e-32P-3	SIZE / SCALE
CHECKED	DATE	PROCESS	DATE	APPROVED	DATE	PART NO.		SHEET X OF X

非会员水印